LTRS	REVISIONS		
ORIGINATOR	CHECKER	ENGR APP	MATL APP

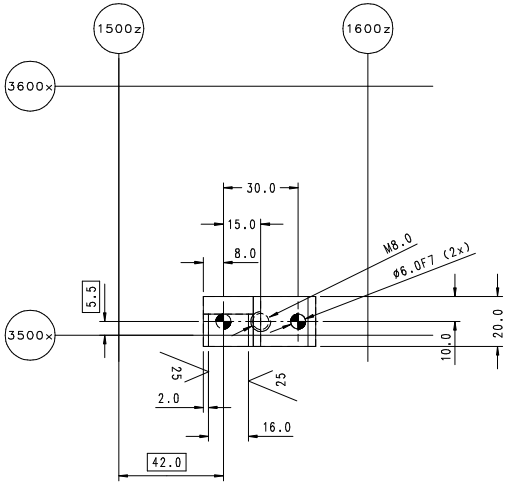

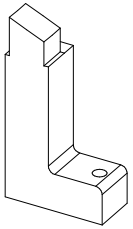

FORM TO CAD/CAM 0.2 6.3

4DR/5DR/WGN
JX7B-A204A40-A REV.81
REINF FRT DR OPG
BLECHDICKE/THICKNESS:1

FORM TO CAD/CAM 0.2 6.3

4DR/5DR/WGN
JX7B-A204A41-A REV.71
REINF FRT DR OPG LH
BLECHDICKE/THICKNESS:1

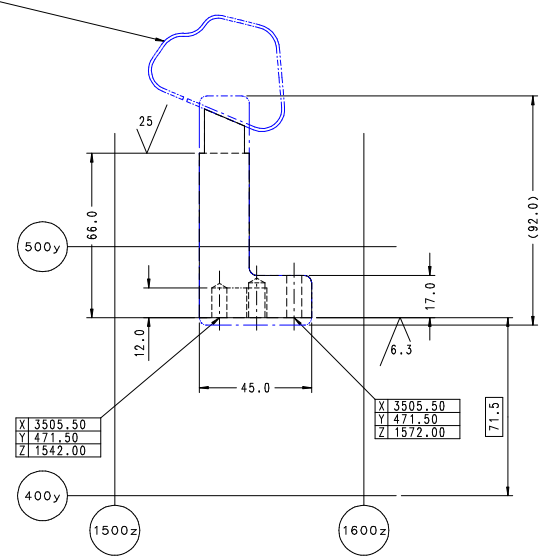

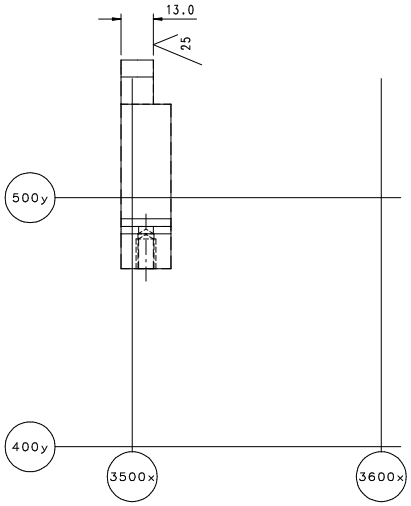

301 LOCATOR BLOCK
1-REQ'D-1.0503 B.14001873 DBR
STK:BL 20x45x92

B. 33203308

REFERENCE

PART MUST COMPLY WITH MATERIALSPECIFICATION WSS-M99P9999-A1
TO HELP SAFEGUARD HEALTH, SAFETY AND THE ENVIRONMENT.

DRAFTED IN ACCORDANCE WITH FAD ENGINEERING DRAFTING STANDARD CURRENT AT INITIAL RELEASE

3 RD. ANGLE PROJ
DIMENSION IN MILLIMETERS

CAD TYPE	CAD LOC.	CAD FILE	DATA
Fides		016ZF099D-20127916	IS MASTER
OPER.NO.	UNIT	DRAWING	
7M_240	116	016ZF099D-20127916 016ZF099D-20127917	
DESIGN	DETAIL	TITLE	SHT: 301
IT8	IT8	GEO_FIXTURE GEO_STATION DOOR_OPEN_RING TUER_OFFEN_RING C519	OF :
CHECKED	SAFETY		SHN/OPP
IT8			SHOWN
SCALE	DATE	DIVISION IT8	FORD WERKE
1:1,1:2	01/11/2016	PLANT Saarlouis Stamping Plant - 3B	

ThyssenKrupp
ThyssenKrupp System Engineering

KENNZEICHNUNG / IDENTIFICATION
VORDERSEITE / FRONT SIDE 9-A204A40-A-01
RUECKSEITE / BACK SIDE 016ZF099D-20127916 116-301-RH

KENNZEICHNUNG / IDENTIFICATION
VORDERSEITE / FRONT SIDE 9-A204A41-A-01
RUECKSEITE / BACK SIDE 016ZF099D-20127917 116-301-LH

BRENNSCHABLONE
CUTTING TEMPLATE

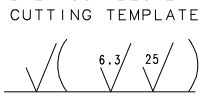

KANTEN GEBROCHEN
REMOVE ALL SHARP EDGES

FLAECHE FUER SCHRAUBENKOEPFE NACH DIN 974 T1
SURFACE FOR SCREW-HEAD ACCORDING DIN 974 T1

TOLERANCE FOR OPEN DIMENSIONS ON MACHINED COMPONENTS TOLERANZ FÜR OFFENE MASSE BEI BEARBEITETEN BETR.-MITTELN			
	TO BIS	100	± 0,25
	OVER ÜBER	100- 300	± 0,5
	OVER ÜBER	300-1000	± 0,8
	OVER ÜBER	1000	± 1,2

TOL.FUER
SETZMASSE ± 0.1
TOL.FOR
SETTING DIMENSION ± 0.1

DIN ISO 2768

REFERENCE DIMENSION TOLERANCE
FROM MANUF.SURFACE TO TOLERANCE BORES ±0.05 FOR TOLERANCE BORES ±0.02 FOR SCREW HOLES ±0.2
STICHMASSTOLERANZ VON BEARB.FLAECHE ZU PASSBOHRUNGEN ±0.05 FUER PASSBOHRUNGEN ±0.02 FUER SCHRAUBENLOECHER ±0.2

Werkstoff: 1.0503
Material: 1.0503

BRUENIERT
BLACK-OXIDE-FINISH

RECHTS GEZEICHNET
LINKS SPIEGELBILD
RH. AS SHOWN
LH. SYM. OPP.

6.3 FUER PASSBOHRUNGEN
FOR DOWEL- HOLE

25 FUER BOHRLOECHER
FOR HOWEL

IT8 MECHANICAL DESIGN TEL.: 0034 961795055 FAX 0034 961117795 www.it8-e.com